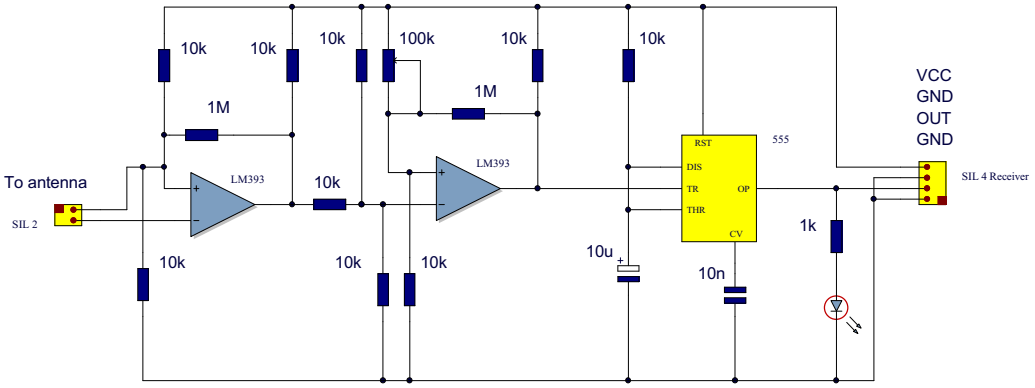
10k
10k
10k
100k
10k
10k
1M
1M
VCC
GND
OUT
GND
To antenna
SIL 2
LM393
10k
LM393
RST
DIS
TR
THR
OP
CV
555
SIL 4 Receiver
1k
10k
10k
10k
10u
10n